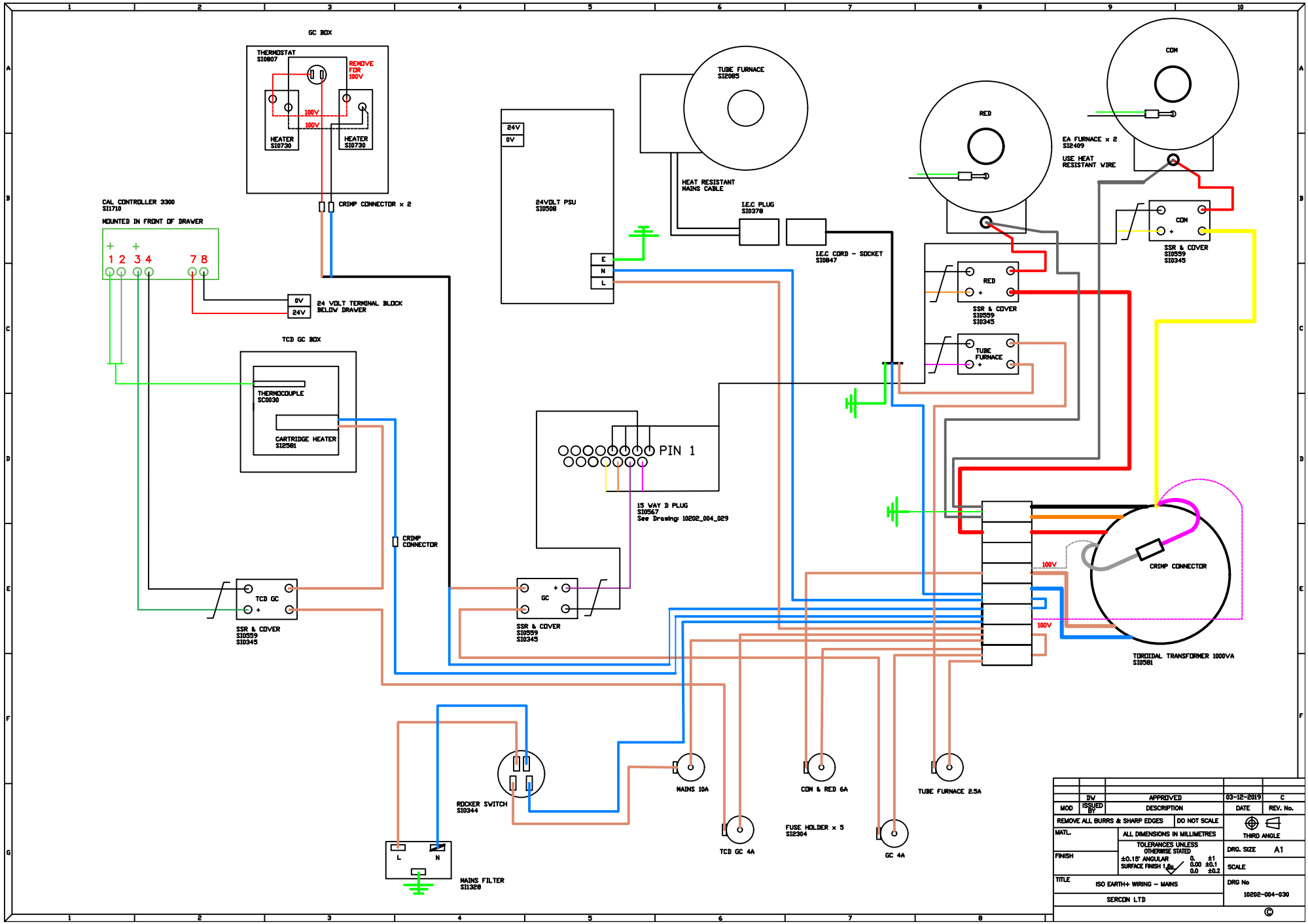
GC BOX
THERMOSTAT
SI0807
REMOVE FOR 100V
100V
100V
HEATER
SI0730
HEATER
SI0730
CRIMP CONNECTOR x 2
CAL CONTROLLER 3300
SI1710
MOUNTED IN FRONT OF DRAWER
1 2 3 4 7 8
0V
24V
24 VOLT TERMINAL BLOCK
BELOW DRAWER
TCD GC BOX
THERMOCOUPLE
SC0030
CARTRIDGE HEATER
SI2581
CRIMP CONNECTOR
TCD GC
SSR & COVER
SI0559
SI0345
24V
0V
24VOLT PSU
SI0508
E
N
L
TUBE FURNACE
SI2085
HEAT RESISTANT
MAINS CABLE
I.E.C PLUG
SI0378
I.E.C CORD - SOCKET
SI0847
PIN 1
15 WAY D PLUG
SI0567
See Drawing: 10202_004_029
GC
SSR & COVER
SI0559
SI0345
RED
SSR & COVER
SI0559
SI0345
TUBE FURNACE
CDM
EA FURNACE x 2
SI2409
USE HEAT
RESISTANT WIRE
CDM
SSR & COVER
SI0559
SI0345
100V
100V
CRIMP CONNECTOR
TOROIDAL TRANSFORMER 1000VA
SI0581
ROCKER SWITCH
SI0344
MAINS 10A
CDM & RED 6A
TUBE FURNACE 2.5A
TCD GC 4A
FUSE HOLDER x 5
SI2304
GC 4A
L
N
MAINS FILTER
SI1328
DV
APPROVED
03-12-2019
C
MOD
ISSUED BY
DESCRIPTION
DATE
REV. No.
REMOVE ALL BURRS & SHARP EDGES
DO NOT SCALE
THIRD ANGLE
MATL.
ALL DIMENSIONS IN MILLIMETRES
FINISH
TOLERANCES UNLESS OTHERWISE STATED
±0.15° ANGULAR
SURFACE FINISH 1.6µ
0. ±1
0.00 ±0.1
0.0 ±0.2
DRG. SIZE A1
SCALE
TITLE
ISO EARTH+ WIRING – MAINS
DRG No
10202-004-030
SERCON LTD
©